Other CruzPro Products

- Depthsounders & Speed/Temperature/Log
- AC & DC Volts/Amps/Amp-Hour/kW/Freq. Monitors
- Digital Rudder Angle Indicator/Alarm
- LPG/Petrol Gas Detectors/Alarms
- Bilge Water Alarms & Bilge Pump Controllers
- Windlass Controller/Chain Counter
- Digital Fuel Gauges & Fuel Consumption Calculator
- Digital Gauge for One or Three Tanks /w Separate Alarms
- Smart ThFour Step Alternator Regulators
- Marine Security System
- RPM/Engine Hours/Elapsed Time/Maintenance Gauge
- Digital Oil Pressure Gauge/Alarm
- Digital Water Temperature Gauge/Alarm
- One and Three Bank Digital Volts Gauges
- Digital Amps Gauge
- Digital Clock/Watch/Race Timers/Alarms
- 8 and 16 Amp Light Dimmers / Motor Speed Controller
- Solar Panel Charge Controllers 6/8/9 & 20 Amps
- 4 & 8 Channel NMEA Combiners/RS-232 Convertors
- Engine/Exhaust Temp. Monitor & Digital Pyrometer
- NMEA 0183 Remote Data Repeater/w 4 Input Channels

CruzPro®

DI-60

8/16 Amp Light Dimmer and Motor Speed Controller

Drill a 2-1/8" (55mm) mounting hole (Figure 1) and bring the wires out of the hole. Use a small screwdriver to make the connections to the terminal on the instrument case back as shown in Figure 2.

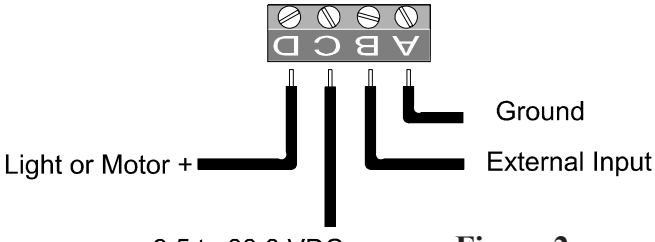

Figure 2

Check your wiring and if everything is wired correctly, mount the instrument. Be sure the bulkhead gasket is in place and use only finger tension to tighten the bracket hold-down nuts

Introduction

The CruzPro DI60 dimmer is used to dim incandescent lights up to 8 or 16 amps (depending upon model) and control the speed of small motors such as fans. The DI60 is easy to use and has an instant ON/OFF switch that remembers the level of dimming.

The DI60 mounts into a 2-1/8" (55mm) round hole and all connections are made to a screw terminal using only a small screwdriver.

An external input on the back of the DI60 enables you to remotely turn the DI60 ON/OFF by grounding this pin. The DI-31 optional light sensor module can be connected to the external input to automatically turn the DI60 ON/OFF at sunset/sunrise.

Table of Contents

Introduction 3

Specifications 4

Installation 5

Operation 7
  Key Functions 7
  On/Off 7

Other CruzPro Products 8

©1999 CruzPro Ltd. DI60MAN-B

http://www.cruzpro.com **info@cruzpro.com**

Specifications

Power supply: 9.5 to 33.0 VDC, .018 amps nominal

Operating temperature: 32 to 122 F (0 to 50 C)

Size: 2.5" dia X 4.1" deep (61mm x 104 mm)

Maximum Current: 8 amps or 16 amps (depending upon model)

External Input: Ground screw terminal "B" to turn the dimmer OFF. The DI-31 optional light sensor module can also connect to this point to automatically turn the DI60 ON/OFF at sunset/sunrise.

Operation

Key Functions

The ▼ + ▲ keys are used to set light intensity and turn the lights ON/OFF. Press the ▼ key to dim the lights and the ▲ key to brighten the lights. As long as power remains connected to the DI60, it will remember the setting even if the lights are turned off with the ✚ key.

On/Off

Press ✚ the key to toggle the lights between OFF and the level of dimming previously set. If the lights will not turn ON, it may be that the dimming is set all the way to minimum or the external input (screw terminal "B") is grounded - forcing the unit OFF.

Installation

Before starting the installation, please read this entire section first. Be sure to install the bulkhead gasket before you install the instrument. Finger tighten the screws that mount the instrument bracket - do not use tools.

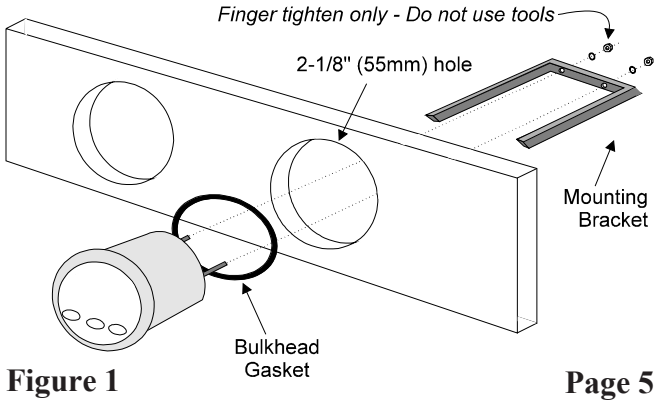

Figure 1